CES

CONTAINERHANDLING EQUIPMENT & SOLUTIONS

VRS VERSATILE REACHSTACKER

THE ADVANTAGES OF MODULARITY

Easy access to components inside of modular units and the possibility of rapid replacement of the modules reduces costs of machine downtime, maintenance and service.

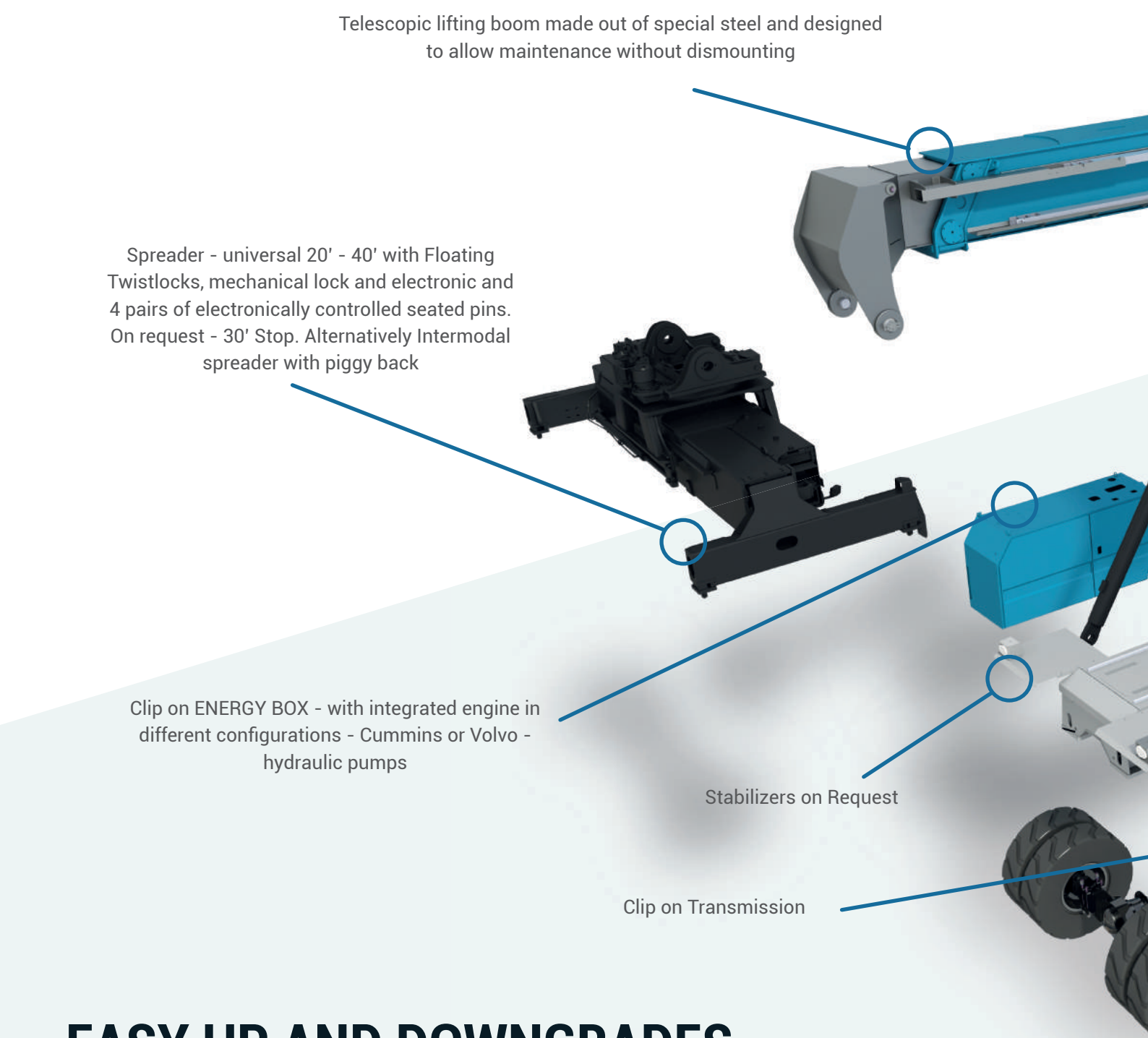

EASY UP AND DOWNGRADES

our Reachstacker is available in 6 basic versions where the only differences are counterweight and size of tires so if the customer decides for the version with the lowest capacities he can later upgrade size of tires and counterweight or add stabilizers in order to have the version with the highest capacities.

EASY REPAIR AND MAINTENANCE

All components are easy to reach and can quickly be dismounted or replaced leading to reduced downtimes and less costs for the operator. For example the ENERGY BOX can be replaced by another unit in a few minutes - the machine goes back in operation while repairs or maintenance can be done on the BOX in need of repair.

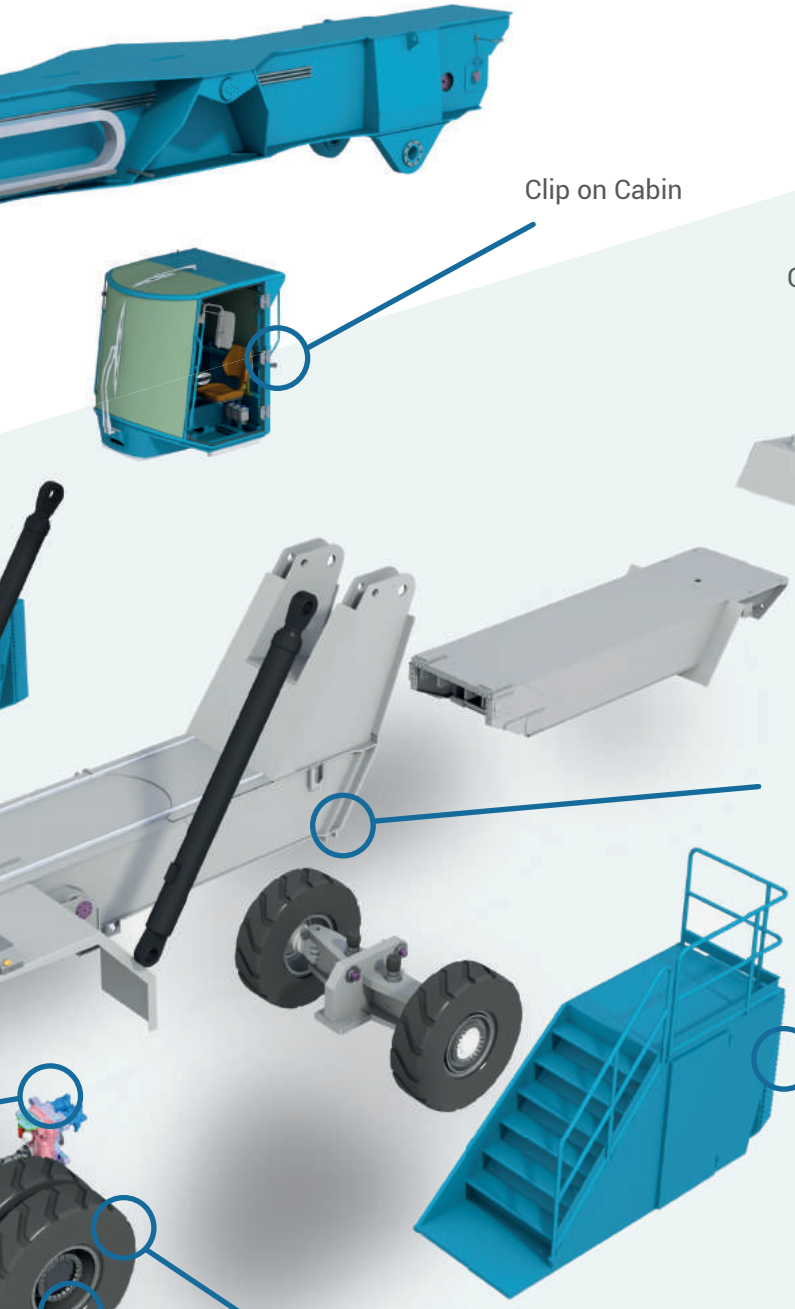

EASY SHIPPING

Our Reachstacker can easily be transported in standard containers or trailers - no special transports required.

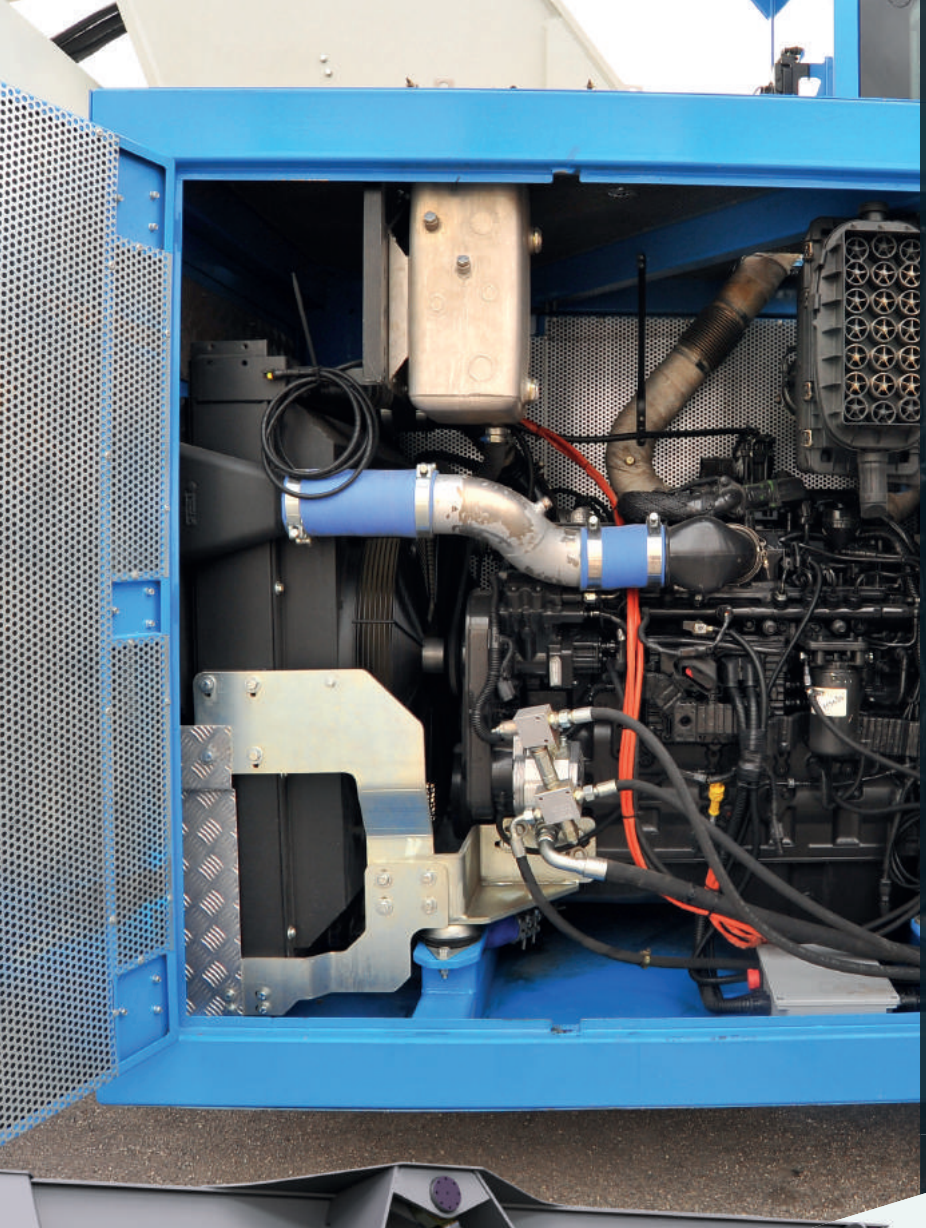

We change the concept!

In a conventional machine engine and transmission are in the middle under the cabin.

We move the technology outside in an ENERGY BOX and SUPPLY BOX, with a hydrostatic/mechanic drive system.

Results are
- **low fuel consumption**
- **low noise level**
- **reduced tire wear**

1 CLIP ON CABIN

2 CLIP ON ENERGY BOX WITH ENGINE, HYDRAULIC PUMP, OIL TANK

3 CLIP ON SUPPLY BOX WITH ELECTRONIC CABINET FUEL TANK AND OIL COOLER

The variable lifting capacity

is comparable to a **traditional Reachstacker of 6.5 m** wheelbase up to a **special Reachstacker with 8.5 m** wheelbase just by extending the frame and consequently moving the counterweight.

After using the maximum lifting capacity with the wheelbase of 8.5 m, once the boom is retracted it is possible to shorten the frame, and then handle the load with the 6.5 m wheelbase.

A **Reachstacker** with the maneuverability of machines with 6.5 m wheelbase, but with the lifting capacity of machines with 8.5 m wheelbase.

THE CLIP ON CABIN RESPECTS HIGHEST ERGONOMIC STANDARDS.

The cabin, positioned in the center of the machine can optionally be available as sliding or tilting cabin.

During stacking of the container, while the boom raises the cab tilts according to the stacking height, favoring the ergonomics of the operator. The whole process is controlled by our CES ECO-SOFT Software.

BARGE HANDLING OR SECOND RAIL OPERATION

The cabin can optionally be installed on the side above the front fender on a hydraulic lift and tilt system.

Weight
Engine
N
Gear
33.5
2.0 t
39.9 t
3.2 m
8.4 m
Stop

VRS

Hydraulically extendable chassis from standard 6.50 m up to 8.50 m wheelbase for highest capacities in second and third row - the most versatile Reachstacker on the market

High dynamic stability outstandingly stable reach stacker

Environmental friendly - lowest noise level

Lowest fuel consumption

VERSATILE REACHSTACKER

Side mounted ENERGY and SUPPLY BOXES

Ergonomic high visibility cabin, tiltable in ratio to the lifting height with optional 360° surround few camera system

German concepts combined with Italian design

Hi-tech hydrostatic drive

Only components with highest quality of best producers in the European design market ensure the reliability of the machine

SERVICE SUPPORT
24 hours / 7 days a week

VRS

WHEELBASE 6.5 m

VERSION	MAX CAPACITY NO STABILIZERS (T)
VRS A	42 / 27 / 13
VRS B	45 / 30 / 14
VRS C	46 / 32 / 17
VRS D	50 / 38 / 21
VRS E	50 / 41 / 23
VRS F	50 / 45 / 25

WHEELBASE 8.5 m

VERSION	MAX CAPACITY NO STABILIZERS (T)
VRS A	42 / 31 / 16
VRS B	45 / 34 / 18
VRS C	46 / 38 / 21
VRS D	50 / 46 / 26
VRS E	50 / 50 / 28
VRS F	50 / 50 / 31

VERSATILE REACHSTACKER

HEADQUARTER
CES Germany
CES Container Handling Equipment & Solutions GmbH
Rudolf-Diesel-Str. 2
76694 Forst
info@ces-gmbh.eu

MAIN OFFICE
Registered address:
CES Italy Srl
Piazza Vittorio Emanuele, 1
37015 Sant'Ambrogio di Valpolicella (VR) Italy
info@ces-italy.com

PRODUCTION PLANT
CES Italy Srl
P.IVA 04325380238
Via Casetta, 241/A
37015 Domegliara (VR) Italy