CES

VRS VERSATILE REACH STACKER

WHAT MAKES US DIFFERENT?

Our Reach Stacker combines 5 wheelbases from short to long with one extendable chassis.

Modular Design - quick release components for easy up - and downgrades. Technology Units with quick release systems - for highest availability.

It only takes 60 minutes to exchange an engine.

The Intelligence of our Software and the DANA - REXROTH TRANSMISSION allow the use of smaller engine and lower max. RPM in favor to fuel consumption and noise level (68 DBA).

High quality components such as Cummins, Volvo, Kessler, Dana and Rexroth.

German Ideas and service mentality combined with Italian design and production capabilities.

1 HYDRAULICALLY EXTENDABLE CHASSIS

The variable lifting capacity

is comparable to a **traditional Reach Stacker of short** wheelbase up to a **special Reach Stacker with long** wheelbase just by extending the frame and consequently moving the counterweight.

After using the maximum lifting capacity with the long wheelbase, once the boom is retracted it is possible to shorten the frame, and then handle the load with the short wheelbase.

A **Reach Stacker** with the maneuverability of machines with short wheelbase, but with the lifting capacity of machines with long wheelbase.

We change the concept!

In a conventional machine engine and transmission are in the middle under the cabin.

We move the technology outside in an ENERGY BOX and SUPPLY BOX, with a hydrostatic/mechanic drive system.

Results are
- **low fuel consumption**
- **low noise level**
- **reduced tire wear**

1 CLIP ON CABIN

2 CLIP ON ENERGY BOX WITH ENGINE, RADIATOR; HYDRAULIC PUMPS, OIL TANK

HANDLING

The traction system used is hydrostatic, for a reduction of operational costs: fuel, tires and brakes. Thus less environmental impact: harmful air emissions and noise.

MODULARITY

Easy access to components inside of modular units and the possibility of rapid replacement of the modules reduces the cost of machine downtime, maintenance and service

FLEXIBILITY

A central frame, hydraulically extendable, to get one machine with multiple wheelbase lengths and so multiple different lifting capacities.

HEAVY DUTY SERIES
UP TO 250 T - MOVABLE

VRS J 125 T

VRS K 150 T

VRS L 250 T

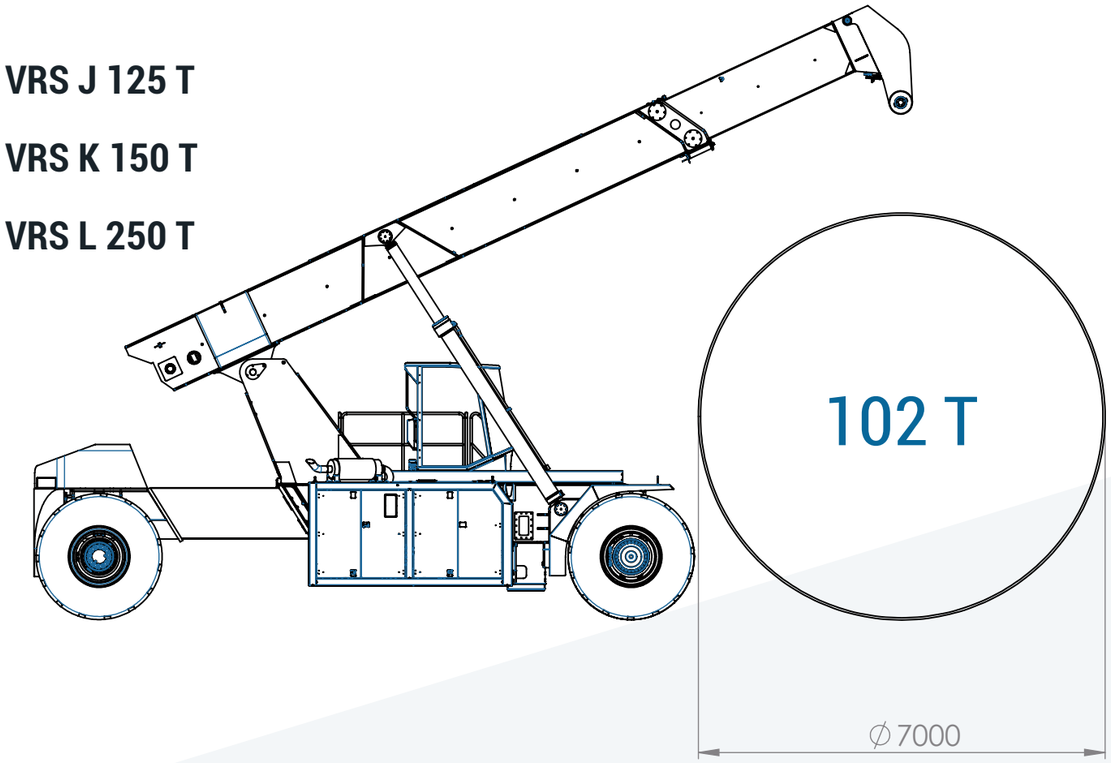

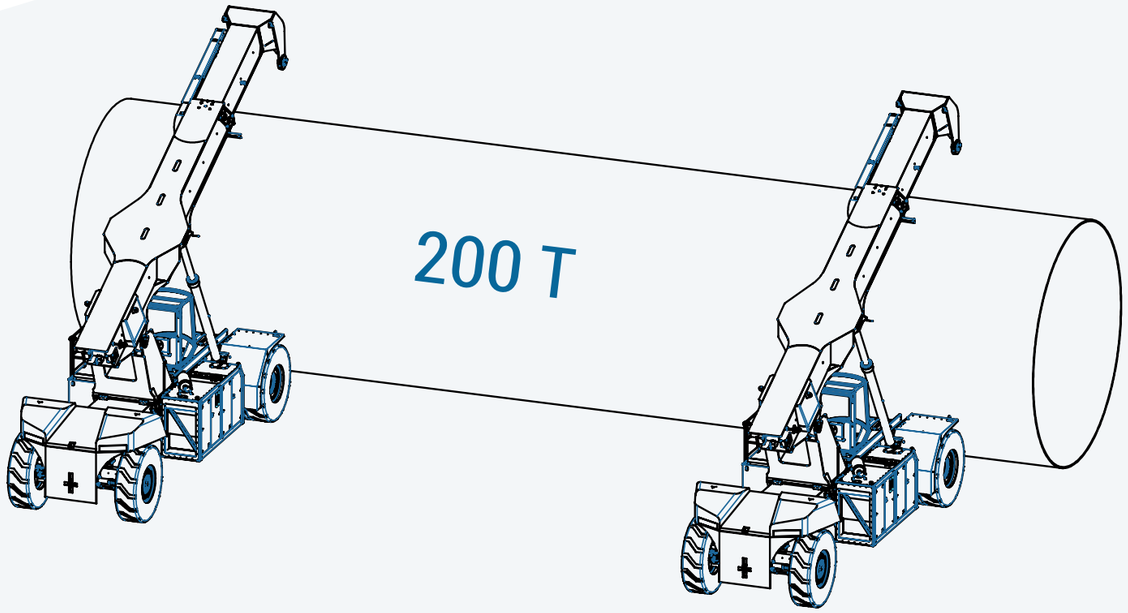

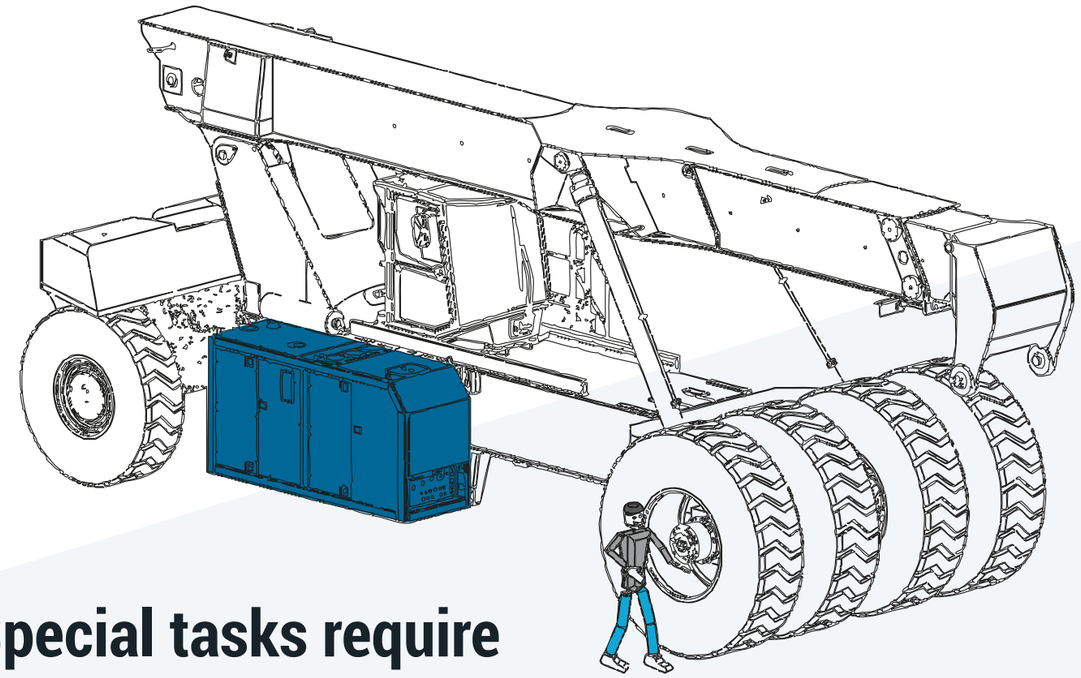

Special tasks require special machines

To realize the high movable load capacities the Reach Stacker are equipped with front tires 27:00 – 49 and rear tires 24:00 – 35

Reach Stacker VRS J and VRS K have 4 tires in front VRS L 6 tires in front.

Mounted with independent wheel suspension for best traction and lowest ground pressure.

Due to Drive Sensing System with Rexroth components the tire consumption is much less.

Depending on the load 2 or 4 wheels are driven

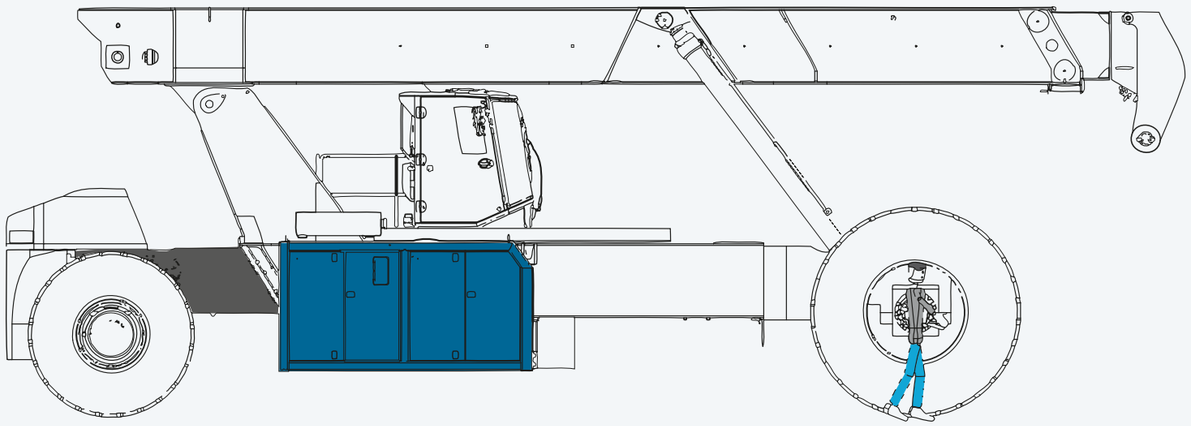

MOVABLE LOADS UNDER CRANE HOOK

VRS J

Wheelbase:
7 .000mm to 9.000mm

Tires:
4x 27:00 - 49
2x 24:00 - 35

Lifting capacities:
125t at 1850mm loadcenter

VRS K

Wheelbase:
9.000mm to 12.000mm

Tires:
4x 27:00 - 49
2x 24:00 - 35

Lifting capacities:
150t at 1850mm loadcenter

VRS L

Wheelbase:
9.000mm to 12.000mm

Tires:
6x 27:00 - 49
2x 24:00 - 35

Lifting capacities:
250t at 1850mm loadcenter

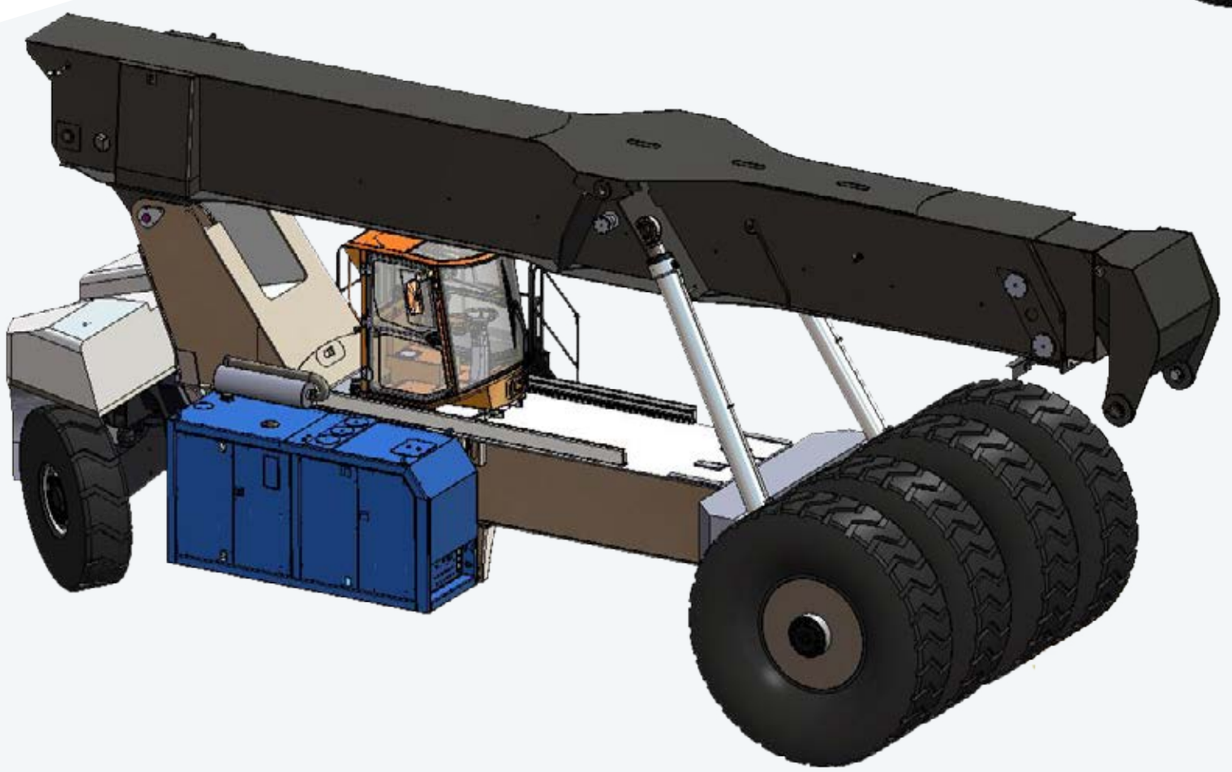

Heavy Duty Series

125 I 150 I 250 t under boom

WHEELBASE 6.5 m

VERSION	MAX CAPACITY NO STABILIZERS (T)
VRS G	57 / 39 / 24
VRS H	86 / 60 / 33

WHEELBASE 8.5 m

VERSION	MAX CAPACITY NO STABILIZERS (T)
VRS G	60 / 48 / 31
VRS H	90 / 75 / 43

Combi Series

Our Combi Reach Stacker series is equipped with spreader up to 90t capacity under lifting eyes and 86t capacities under Twist lock.

Best machine to handle containers and heavy cargo.

WHEELBASE 6.5 m

VERSION	MAX CAPACITY NO STABILIZERS (T)
VRS A	42 / 27 / 13
VRS B	45 / 30 / 14
VRS C	46 / 32 / 17
VRS D	50 / 38 / 21
VRS E	50 / 41 / 23
VRS F	50 / 45 / 25

WHEELBASE 8.5 m

VERSION	MAX CAPACITY NO STABILIZERS (T)
VRS A	42 / 31 / 16
VRS B	45 / 34 / 18
VRS C	46 / 38 / 21
VRS D	50 / 46 / 26
VRS E	50 / 50 / 28
VRS F	50 / 50 / 31

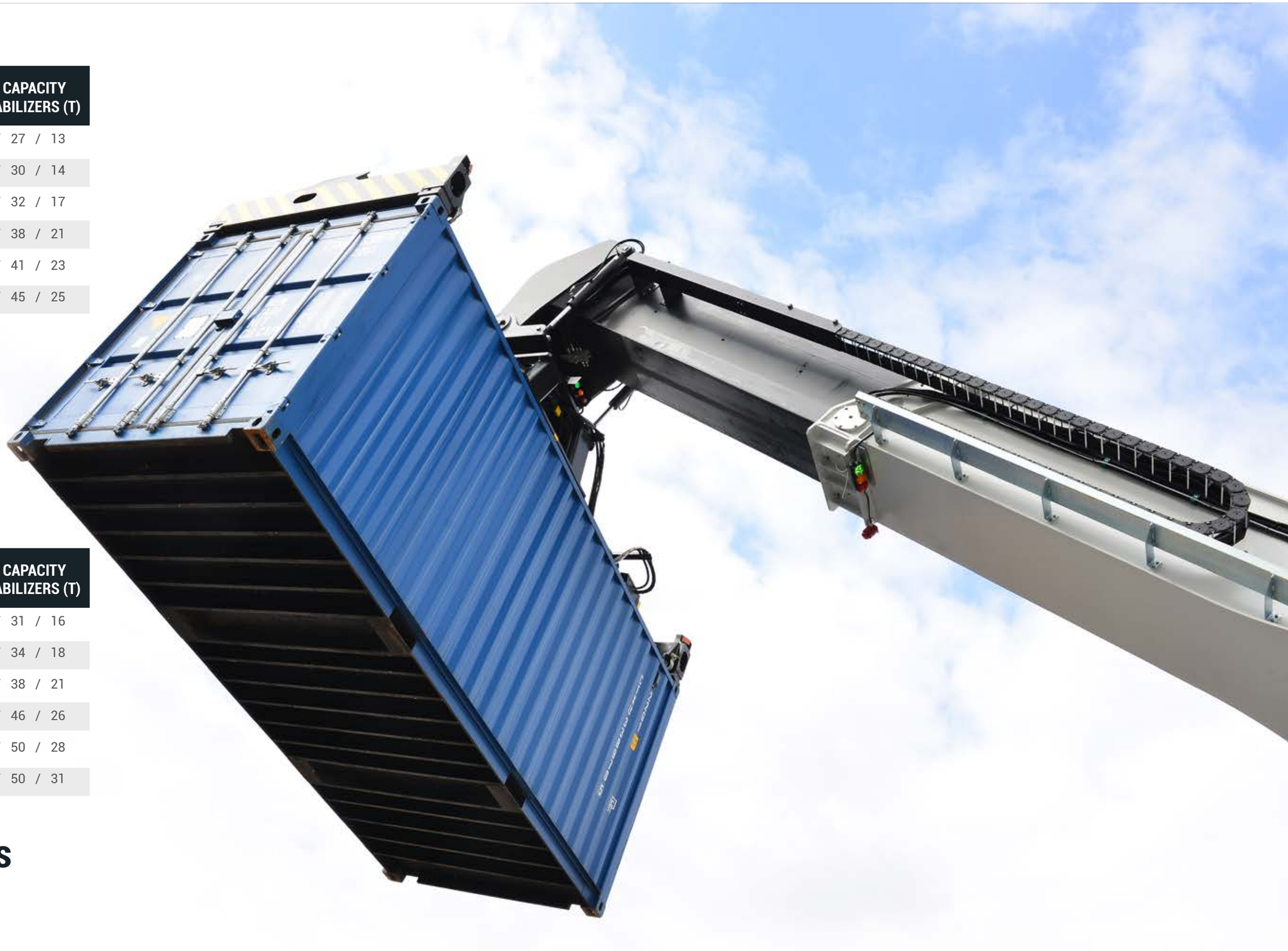

Standard Series

Our Standard Reach Stacker series is equipped with spreader up to 50t capacity and 4 lifting eyes with each 12.5t capacity

THE CLIP ON CABIN RESPECTS HIGHEST ERGONOMIC STANDARDS.

The cabin, positioned in the center of the machine can optionally be available as sliding.

During stacking of the container, while the boom raises the cab tilts according to the stacking height, favoring the ergonomics of the operator. The whole process is controlled by our CES ECO-SOFT Software.

BARGE HANDLING OR SECOND RAIL OPERATION

The cabin can optionally be installed on the side above the front fender on a hydraulic lift and tilt system.

THE ADVANTAGES OF MODULARITY

Easy access to components inside of modular units and the possibility of rapid replacement of the modules reduces costs of machine downtime, maintenance and service.

EASY REPAIR AND MAINTENANCE

All components are easy to reach and can quickly be dismounted or replaced resulting in reduced downtimes and less costs for the operator. For example the ENERGY BOX can be quickly replaced by another unit - the machine goes back in operation while repairs or maintenance can be done on the BOX in need of repair.

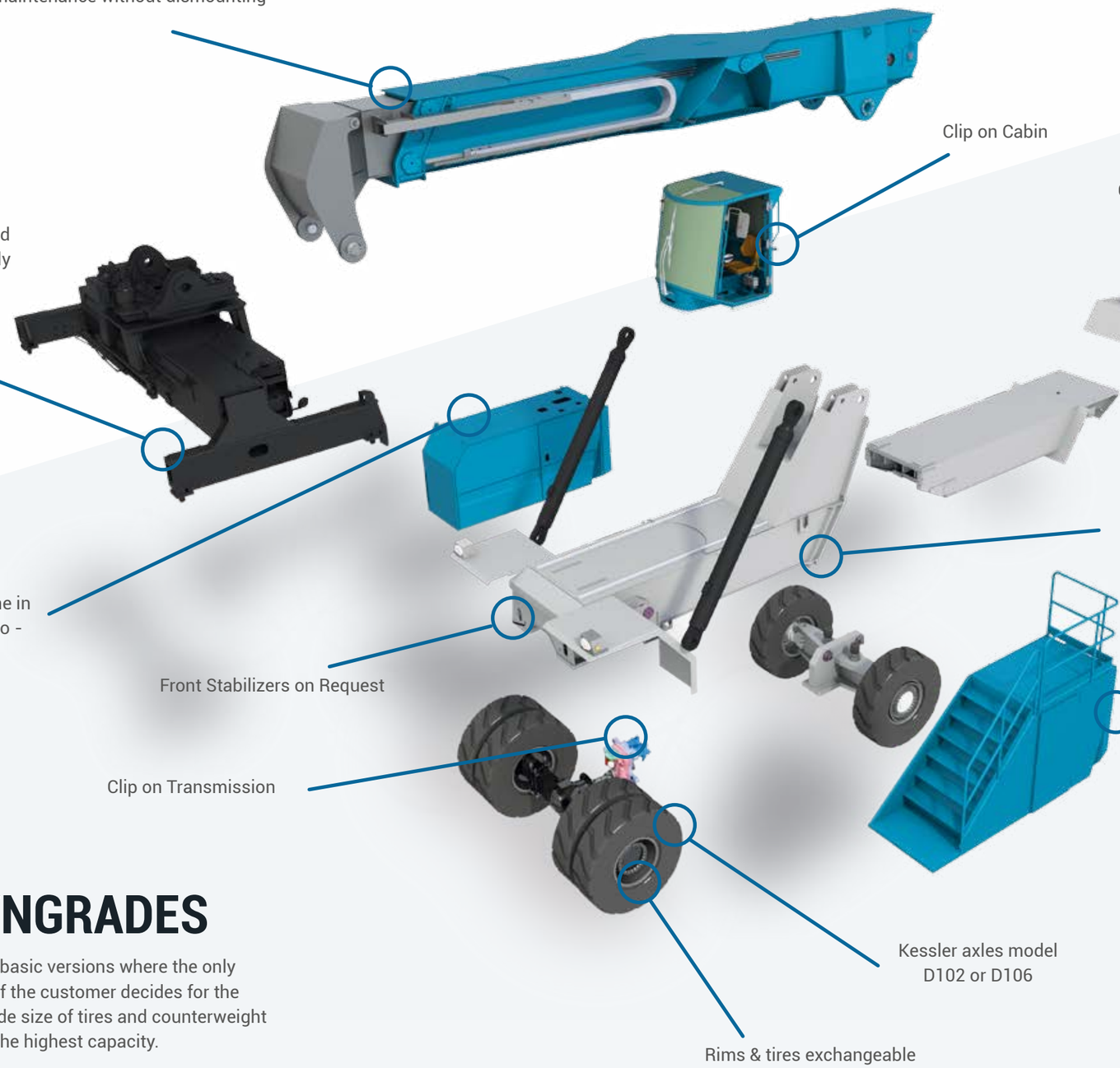

EASY UP AND DOWNGRADES

Our standard Reach Stacker series is available in 6 basic versions where the only differences are counterweight and size of tires. So if the customer decides for the version with the lowest capacity he can later upgrade size of tires and counterweight or add stabilizers in order to have the version with the highest capacity.

EASY SHIPPING

Our Reach Stacker can easily be transported in standard containers or trailers - no special transports required.

VERSATILE Reach Stacker FEATURES

Hydraulically extendable chassis for highest capacities in second and third row - the most versatile Reach Stacker on the market

High dynamic stability outstandingly stable reach stacker

Side mounted ENERGY and SUPPLY BOXES

Ergonomic high visibility cabin, tiltable in ratio to the lifting height with optional 360° surround few camera system

Environmental friendly - lowest noise level

Lowest fuel consumption

German concepts combined with Italian design

Hi-tech hydrostatic drive

Only components with highest quality of best producers in the European design market ensure the reliability of the machine

SERVICE SUPPORT
24 hours / 7 days a week

SALES & SERVICE
CES Containerhandling Equipment & Solutions GmbH
Rudolf-Diesel-Str. 2
76694 Forst/Germany
Phone +49(0)7251-3657-0
Fax: +49(0)7251-3657-99
info@ces-gmbh.eu

PRODUCTION - FACTORY
CES Italy Srl
P.IVA 04325380238
Via Casetta, 241/A
37015 Domegliara (VR) Italy

www.cesgroup.eu
www.ces-vrs.eu